Bill of Materials

Item	Description	Size	Length (mm)	Material	Qty
1	Angle Support	L3x3x1/4	143.415	A36	1
2	Angle Support	L3x3x1/4	276.00	A36	1
3	Angle Support	L3x3x1/4	236.001	A36	1
4	CS Flat Plate	1/4"	120 x 100	516 Gr.70	1

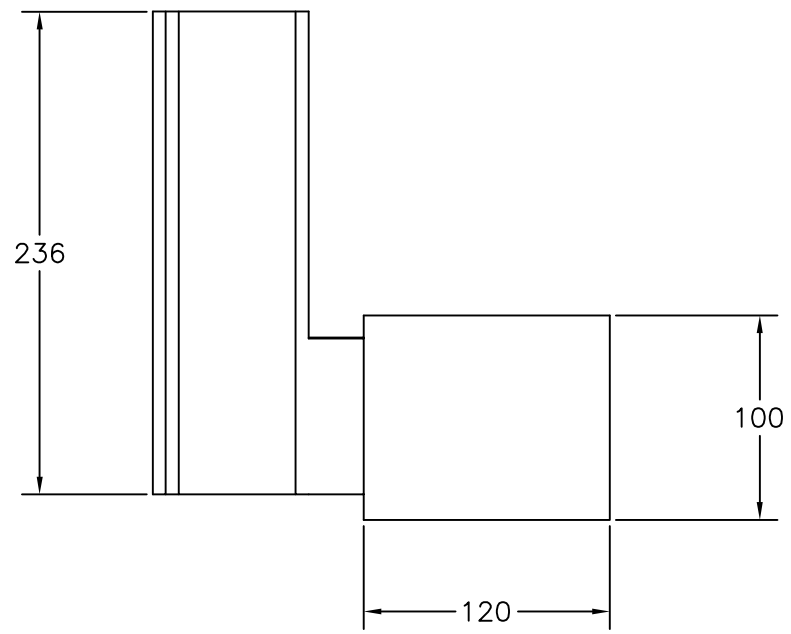

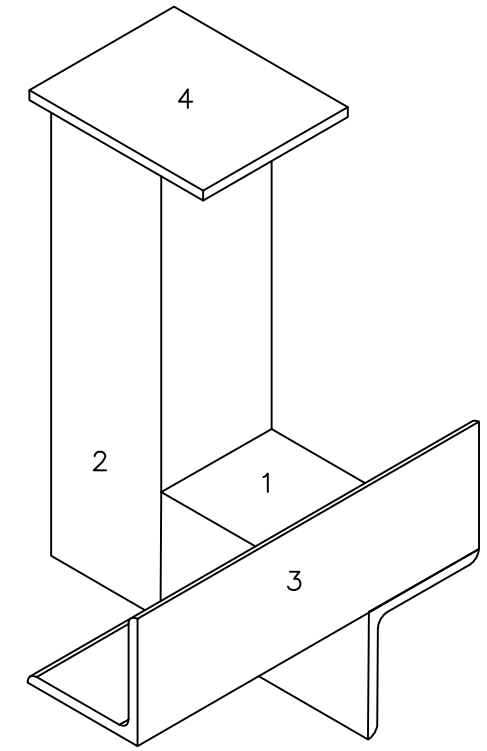

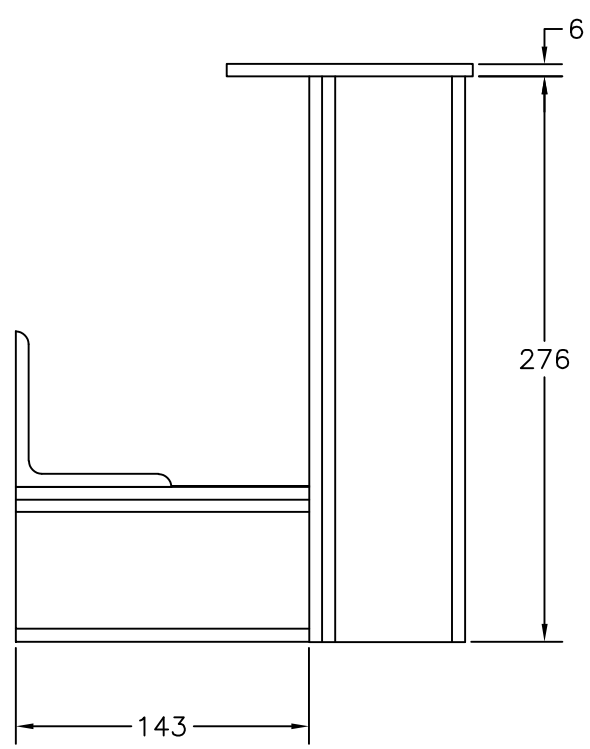

REV.	STATUS	DATE	PURPOSE OF ISSUE	PREP.	CHKD.	APPD.	AUTH.
1	F	08.10.24	FOR APPROVAL	AJD	AJD	IES	SES
0	F	05.08.24	FOR APPROVAL	AJD	AJD	IES	SES

CLIENT: ENER TECNOLOGI
SERVICE: PROPANE REFRIGERATION PACKAGE
LOCATION: IRAQ
UNIT TAG NO.: RU-0001 A/B

VENDOR LOGO

Contract No. P.O No. ENER–MME–2024–100–001 SCALE

DRAWING TITLE:
ADDITIONAL SUPPORT FOR 60701

DRAWING NO.	REV.	SHEET No.	SIZE
MPE007–60794	1	1 OF 1	D

Z:\16. ENGINEERING_Chemical Group\04. Project\12. MPE007_Delta Gmbh_Refrigeration Package\CAD\PLANT 3D\10 Sep' 24\Orthos\DWGs\60794.dwg